DSP ASPECTS OF HRTF MEASUREMENTS

Klaus A J Riederer and Matti Karjalainen

Helsinki University of Technology (HUT),
Laboratory of Acoustics and Audio Signal Processing
Otakaari 5A, P.O. Box 3000, FIN-02015 HUT, Finland
Email: Klaus.Riederer@hut.fi, Matti.Karjalainen@hut.fi

ABSTRACT

This paper describes common DSP problems and solutions for transfer function measurements in linear and time invariant systems, reviewed in the light of a case study. General DSP aspects of head-related transfer function measurements performed in an object-oriented signal processing environment — QuickSig — are introduced.

1. TRANSFER FUNCTION MEASUREMENTS

Today, more and more highly sophisticated user defined instrumentation systems are used for acoustic and audio measurements. They apply modern digital signal processing (DSP) methods, which provide several ways for enhancing the measurements and analyzing the acquired data. Common grounds for system identification are discussed in the following; a detailed study of transfer function measurement is also given in [1].

1.1. Linear and time invariant system

The dynamic behavior and properties of a *linear* and *time invariant* (*LTI*) system is completely determined by its complex-valued transfer function, e.g., the *frequency response or* equivalently the *impulse response* (in the time domain) of the system. The impulse response (IR) is acquired by deconvolving the output of the system with the stimulus at the input. In a linear transform domain, the system response is obtained by simply dividing the output by the input. In this paper the linear transform is referred to as the Fourier transform, which is discretely computed by the fast Fourier transform (FFT) algorithm.

1.2. Excitation signals

Ideally, the excitation signal should have *flat spectrum*, i.e., equal energy at all frequencies, and a *low crest factor*, i.e., the peak amplitude divided by the root mean square (RMS) of the signal. Either averaging (repetition) or a strong signal level must be used in order to obtain an appropriate signal-to-noise ratio (S/N). The analysis of *deterministic* signals is rather straightforward using convolution and/or deconvolution and Fourier transforms.

Pseudo-random noise is a deterministic discrete-time periodic sequence, whose length is the inverse of the repetition frequency. It can be easily generated and averaged by DSP methods. Typically, periodic noise is designed to have a flat spectrum with a random phase, i.e., low crest factor, but it may also be spectrally *colored* for optimal measurement suitability. A commonly used type is the binary *maximum length sequence* (*MLS*), which has a flat spectrum and a random phase that varies pseudorandomly with frequency. It has a period of $L = 2^N - 1$ and the phase is uniformly distributed over its range of $+\pi$ to $-\pi$. Thus the binary MLS has a *minimum crest factor* and the signal energy is maximized and the S/N ratio is optimal.

Variants to MLS sequences are *random-phase flat spectrum* (*RPFS*) signals that have an even spectrum in certain time window and certain frequency points [2]. They are not binary codes, instead the phase values of RPFS signals are randomized. Although the crest factor of RPFS signals is not optimal, the sequence may have a length L of an exponent of 2, i.e., $L = 2^N$. Hence, the signals are easily produced using FFT/IFFT techniques and the impulse response of the system is efficiently achieved by DSP techniques. This signal type is also chosen for the stimulus in the HRTF measurements described later.

1.3. Difficulty of circular signal analysis

In practice, signal analysis is always carried out through a window of finite length (in time), since the data acquisition in reality has a limited duration. If the signal in question has a duration that exceeds this acquisition window, errors will occur. In many signal analysis methods, this makes measurements and estimates appear as if they were *periodic*, no matter what the original signal type was. This *circularity* characteristic leads to *circular* (periodic) analysis calculations, which is also inherent in the discrete Fourier transform. It states that the rectangular time window (Fourier transformed as a *sinc*-function) is the fundamental *spectral window* in the spectrum analysis.

The periodic impulse response (PIR) is composed from sequential L-point segments of the impulse response, which are shifted to the origin and summed together. This introduces time aliasing and it effectively *wraps* the IR back on itself, to the beginning of the IR, to form the PIR. The distortion due to these *wrap around* effects can be made arbitrarily small by choosing a sufficiently long period L, which must be at least as long as the effective impulse response of the system under test.

2. HRTF MEASUREMENTS

A head-related transfer function (HRTF) relates the sound pressure at a measurement point in the test subject's ear canal to the sound pressure measured at the position of the center of the head while the test person is absent [3]. Measured HRTFs, as well as binaural recordings include all the basic binaural spatial information received by the human auditory system [3]. The applications of binaural technology vary from human hearing research to sound reproduction of virtual systems, e.g., auditory displays. For most applications, the HRTFs are modeled (synthesized) by digital filters.

In this paper the term "HRTF" is applied as a more general term than the abbreviation HRIR (head-related impulse response, relating to time domain characteristics). In the cases where especially the time domain responses are considered, the term HRIR is used.

2.1. Measurement system

A high-quality system for blocked ear canal HRTF measurements was devised by the first author [1]. Seven loudspeakers in spherical 190 mm plastic casings were attached to a framework covering different elevation angles with a constant 1.9 m distance in an approx. 800 m^3 anechoic chamber. A test person was seated in a measurement chair that was fixed to a special motor-driven turntable. The chair was equpped with an electrical lift and a hand-made back/neck-rest, allowing accurate positioning of the subject. Miniature Sennheiser microphones KE 4-211-2, coupled to a battery-operated custom preamplifier, were attached to the ear-plugs in the ear canals of the test subject. The automated measurement procedure was controlled by an Apple Macintosh Quadra 950, which generated the stimulus, i.e., a pseudorandom RPFS sequence. Fig. 1 introduces the main hardware and Fig. 2 the microphone positioning applied in the HRTF measurements.

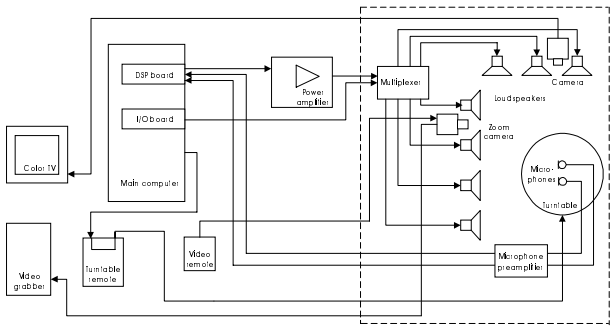

Figure 1. Simplified electrical connections of the HRTF measurements; e.g., the monitors of the two computers are omitted. The dashed line outlines the equipment placed in the anechoic chamber.

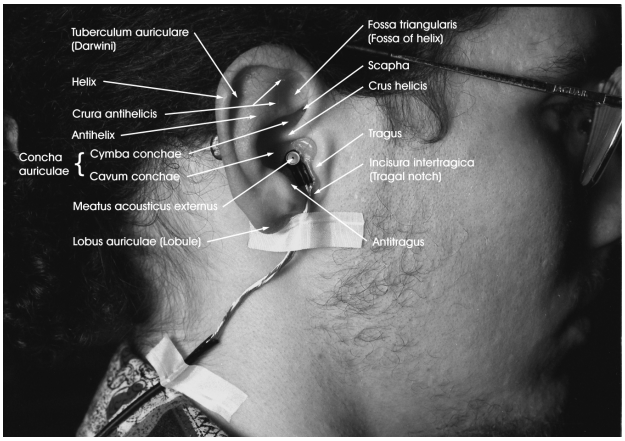

Figure 2. Blocked meatus HRTF measurements, applying a Sennheiser KE 4-211-2 miniature microphone, author as a subject. The arrows indicate the main parts of the pinna.

2.2. QuickSig programming environment

The kernel of the measurement system was a QuickSig program, written in Lisp in the Acoustics laboratory at HUT. It is based on QuickSig that is an object-oriented signal processing [4]. It has a hierarchical structure. The basis is the Macintosh Common Lisp, an object-oriented programming (OOP) tool for Lisp programmers. The second layer is an object-oriented extension, Common Lisp Object System (CLOS), which serves as a platform to the QuickSig and its accessory extension QuickC30. It is a low-level signal processor programming extension, which addresses directly the 32-bit floating-point DSP-board (TMS320C30) in the measurement computer.

The OOP environment in Lisp makes it profitable and efficient to integrate complex software systems, e.g., for the use of audio and acoustical measurements and psychoacoustical listening tests. OOP is based on sophisticated data structures called *classes* that are used to create object *instances*. For a given class, each instance has the same structure, behavior, and type as the other members (instances) of the same class. The characteristics of a class with its instances, called *instance variables* (*slots*), are *inherited* to *subclasses*. *Methods* and *functions* are used to define desired operations on objects and data.

2.3. QuickSig measurement software

The software had separate methods for HRIR, headphone and system measurements but utilized also the many common program parts. For example, the stimulus generation, data acquisition, turntable and loudspeaker control, and log window were the same for all types of measurements. In addition, joint ways for improved functionality were applied; e.g., a S/N ratio was calculated during the data acquisition by obtaining the ratio of

the signal near the Nyquist frequency and the noise level. If this value was lower than a predefined threshold, i.e., the preset object instance *noise-check*, the individual measurement was automatically renewed. Also, a corresponding method was utilized for the AD/DA converters: if their input level was too high (overload), the acquisition was repeated.

2.4. HRIR measurement procedure

Fig. 3 represents a simplified flowchart of the HRTF measurement procedure for obtaining the HRIRs of a test subject. The software was based on one special class named *hrtf-measure-set* that had many instance variables. These slots supplied the basic objects for the database, the log window, the loudspeaker multiplexer and the turntable addressing, which were controlled by separate methods.

The *measurement object* was instantiated by user-defined parameters that contained the desired azimuth and elevation angles and threshold for the *noise-check*. Once the software had initialized the DSP board, the I/O interface board and the turntable and prompted the log-window, the actual HRTF measurement could be started by calling the *measure-hrtfs* -method. This included three methods in which first either an existing database/test person was chosen or a new one was defined, and then, finally, the *measure-full-set* method was performed until every elevation set (*measure-elev-set*) was approved by the test supervisor.

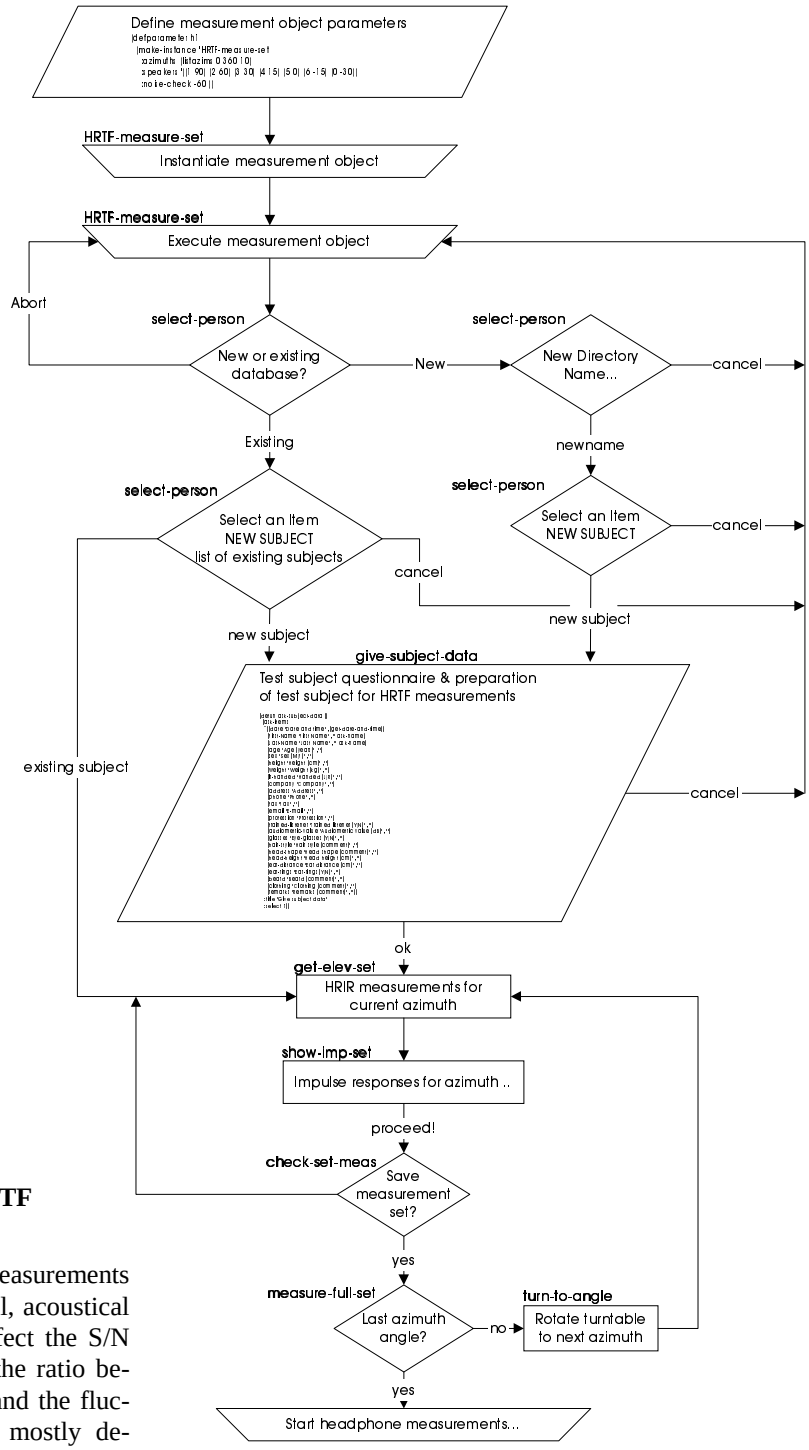

Figure 3. Simplified flowchart of the HRIR measurement procedure.

3. QUALITY DEGRADATION IN HRTF MEASUREMENTS

The disrupting factors in the HRTF measurements can be divided into three categories: physical, acoustical and electrical faults. In some cases they affect the S/N ratio. In the current work, it is denoted as the ratio between the desired deterministic component and the fluctuating non-deterministic component. It is mostly dependent on two major factors. 1) The *background noise*, which consists of electrical and acoustical (e.g., infrasound) noise, limits the S/N ratio to a level of ca. 70 dB in the applied anechoic chamber. 2) *Reflections* from the measurement system, such as reflections from the turntable plate, and low-frequency wall reflections in the anechoic chamber cause coherent artifacts to responses.

Many other errors are possible during measurements [5]. 1) The *A/D conversion* in the equipment may be problematic; it can produce DC-offset to measured impulse responses. This would reduce the accuracy of the compensated (deconvolved) measurement results. 2) The *human head shadows* effectively the contralateral ear, i.e., the ear opposite to the sound source. This distance, frequency, and direction-dependent interaural level dif-

ference is maximally ca. 17 dB (!). 3) *Intense movement of a test person* causes inaccuracies in the obtained data by producing false frequency responses. 4) Other type of *systematic faults* can occur — such as reversed channels or polarities, false equipment settings, compensation errors and distortion due to too high signal levels.

4. MEANS FOR MEASUREMENT ENHANCEMENT

There are several ways of avoiding or minimizing the disrupting elements in practical measurements. Usually, it is a question of improving the dynamics, i.e., the S/N ratio, of the measurement setup. The first step, of course, is to prevent (systematic) measurement errors to be born. That is, to choose the measurement room as good as possible (e.g., anechoic chamber), removing all reflection-causing material (if possible), using high-quality calibrated equipment and so forth. Also, in the HRTF measurements the subject has to be monitored for movements, for example via video cameras by the test experimenter, who then renews the measurement set, if the person is noted to have moved. Next, the major DSP methods for enhancing HRTF measurements are presented.

4.1. Averaging

Ordinarily, a great deal of noise and other types of disturbances appearing in a measurement is uncorrelated with the probing pulse and can thus be reduced by repeating the stimulus and coherently averaging the measured responses. Basically, the S/N ratio is increased by the square root of the amount of the averaged trials compared to a single trial. The measurement time is prolonged according to the amount of trials. The analysis time can be decreased in two ways: 1) by reducing the amplitude of the corrupting noise, which may be impossible, 2) by increasing the magnitude of the excitation, which at some point causes saturation. Moreover, when employing sufficiently long ($L \geq 2^{10}$) pseudo-random sequences, no extra averaging of the sequence itself is needed.

4.2. Signal shaping

The S/N ratio may also be raised by optimizing the stimulus, which is dependent on the frequency bandwidth desired. A flat spectrum with random phase (e.g., a discrete MLS) is not necessarily the best solution for every case; instead, it may be advisable to use *pre-emphasized* (colored) excitation signals. This can be done efficiently by digital filters. For example, the frequency-dependent power rating of the device under test can well be taken into account. Also, this signal shaping may include (*pre*)*equalization* of the transfer characteristics of the transmission path (the frequency response of the microphone etc.). Especially, in precise HRTF measurements the two following methods are important. 1) *Compensation* which *removes* the disturbing effects of the measurement equipment on the measured responses. 2) *Equalization*, on the other side, nullifies the transfer function of the reproduction device so that true spatial information is transmitted. Also, one method to avoid DC-offsets is to modify the measuring sequence to consist of two subparts having opposite polarities. Now, differentiating the subresults removes the unwanted DC offset errors from the obtained system response.

4.3. Data post-processing

Usually *windowing* or *gating* techniques and *filtering*, such as anti-alias or high-pass (for removing infrasound), are necessary to remove some of the artifacts due to the measurement setup and surroundings. For example, DC errors can be filtered off by a high-pass (DC-blocking) filter. Room, turntable, etc. reflections can be cut off based on their time delay by selecting a shorter time analysis window. In some cases, *smoothing* is desired, e.g., for digital filter design purposes (*down-sampling*), for clearer visual observation. Also, it is justified to use in HRTF analysis a nonlinear frequency scale, e.g., BARK scale, in order to obtain a good match with the human auditory resolution.

In case of ruined HRTF data, e.g., due to intense movement of the test person, the following method may be used. The erroneous measurement may be substituted by employing the responses of the (two) adjacent positions. First, the impulse response is linearly interpolated sample by sample, and then a delay equal to the average time delay between the two impulses is added. The spatially denser performed measurements, the better substitution is obtained.

5. SUMMARY

This paper reviewed common DSP aspects of LTI systems; problems and solutions regarding to measurement and analysis of HRTFs. Accomplished and other DSP methods for a high-quality HRTF measurement system were also introduced.

6. REFERENCES

[1] K. A. J Riederer, *Head-related transfer function measurements*. Master's Thesis. Helsinki University of Technology, Laboratory of Acoustics and Audio Signal Processing. Espoo, Finland, 1998, 134 p.

[2] H. Møller, "Fundamentals of binaural technology", *Applied Acoustics*, vol. 36, 1992, pp. 171–218.

[3] M. Karjalainen, "DSP software integration by object-oriented programming: A case study of QuickSig", *IEEE ASSP Magazine*, Apr 1990, pp. 21–31.

[4] M. Karjalainen, unpublished method.

[5] K. A. J Riederer, "Repeatability analysis of HRTF measurements", proposed paper, *105th AES Conv.*, San Francisco, USA, 26-29.9.1998.